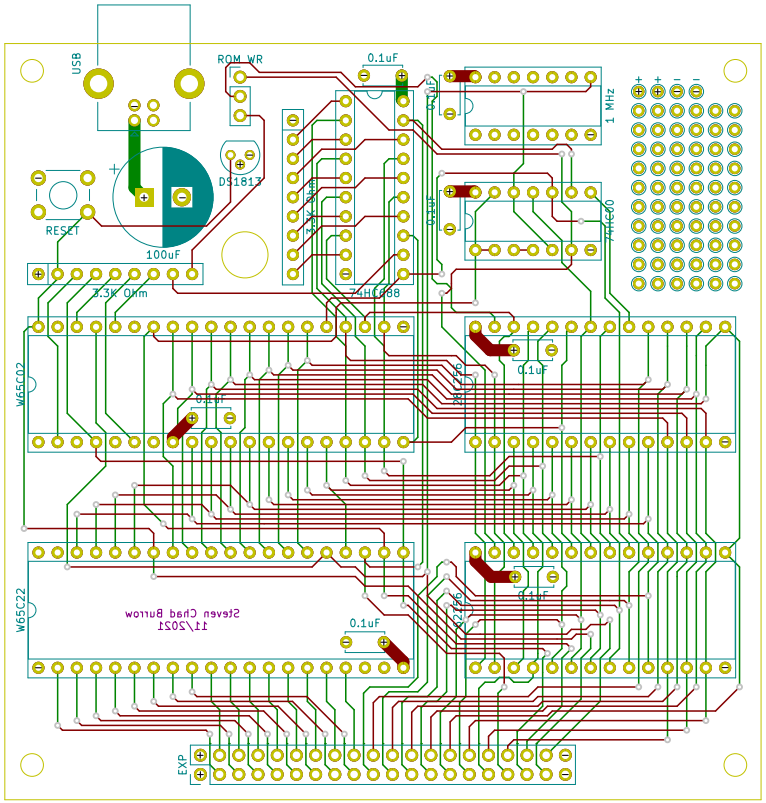
USB
ROM WR
0.1uF
1 MHz
DS1813
RESET
100uF
3.3K Ohm
74HC00
74HC088
W65C02
W65C22
Steven Chad Burrow
11/2021
EXP

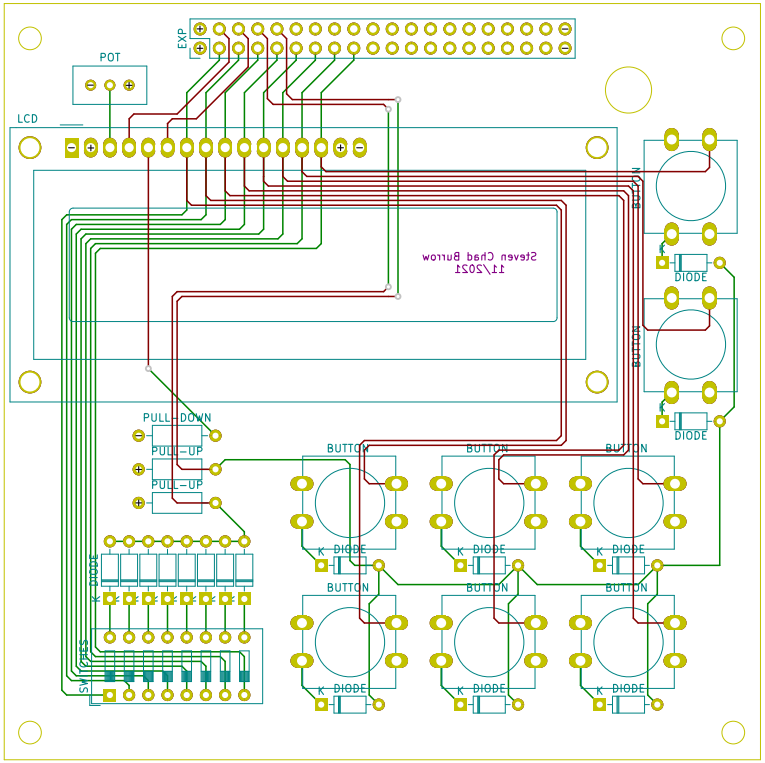
EXP
POT
LCD
Steven Chad Burrow
11/2021
BUTTON
DIODE
PULL-DOWN
PULL-UP
SWITCHES